Elbows

BG 90

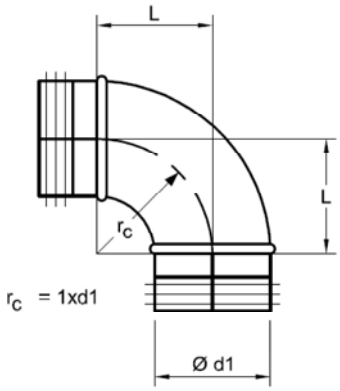

Description

- **90° elbow**
- **die stamped**
- **continuously stitch welded**
- **rolled edges**

Ordering Example

	Type	$^{Ø}d_1$
Gasketed, G-3	BG 90	aa
Ungasketed, G-0	B 90	aa

$^{Ø}d_1$ (in)	L (in)	Weight (lb)
3	3	0.3
4	4	0.5
5	5	0.7
6	6	1.1
7	7	1.5
8	8	1.9
9	9	2.2
10	10	3.0
11*	11	3.5
12	12	4.1

*fabricated construction

THIS COMPANY AND ITS PRODUCTS ARE PROTECTED BY PATENTS AND REGISTERED TRADEMARKS.
COPYRIGHT 2008 ALL RIGHTS RESERVED. ALL PREVIOUS VERSIONS OBSOLETE.